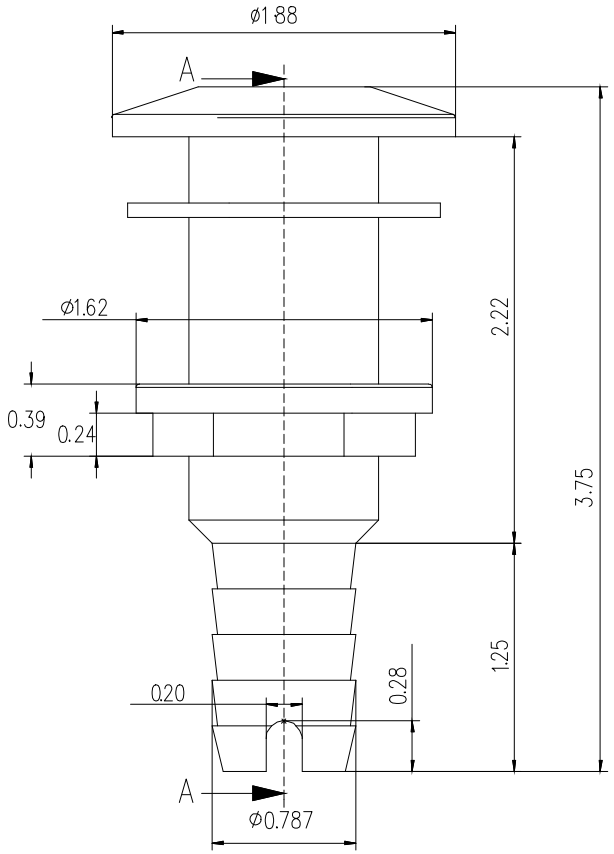

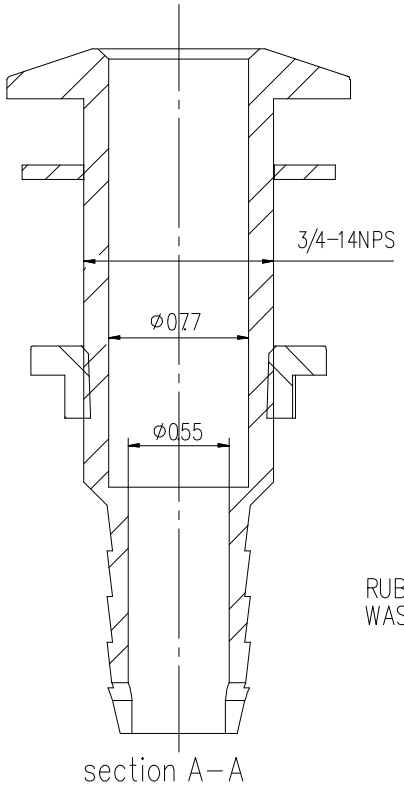

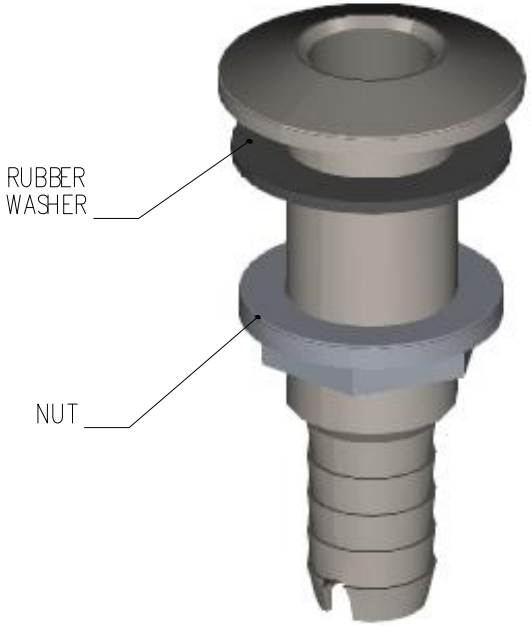

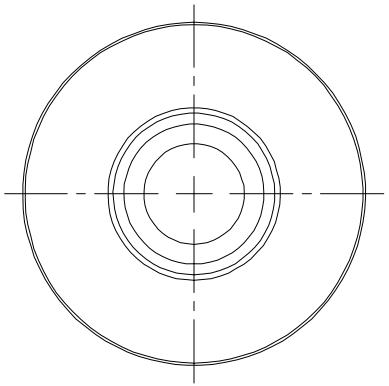

	Whitecap		
Unit	Inchs	View	
P/N	6547		20171026